0JWT.301.354 | REV - | SHEET 1 OF 1

THE SIZES INDICATED ARE METRIC SIZE(mm).

ME1003

NOTES:
1.CCW
2.Front bearing: NTN6006 LLUC3/5K (Made in Japan)
3.Product to be shipped in plain white box, styrofoam packaging
Include Dyno Plot in box.
4.Box to be marked:
Part Number: ME1003
Made in China

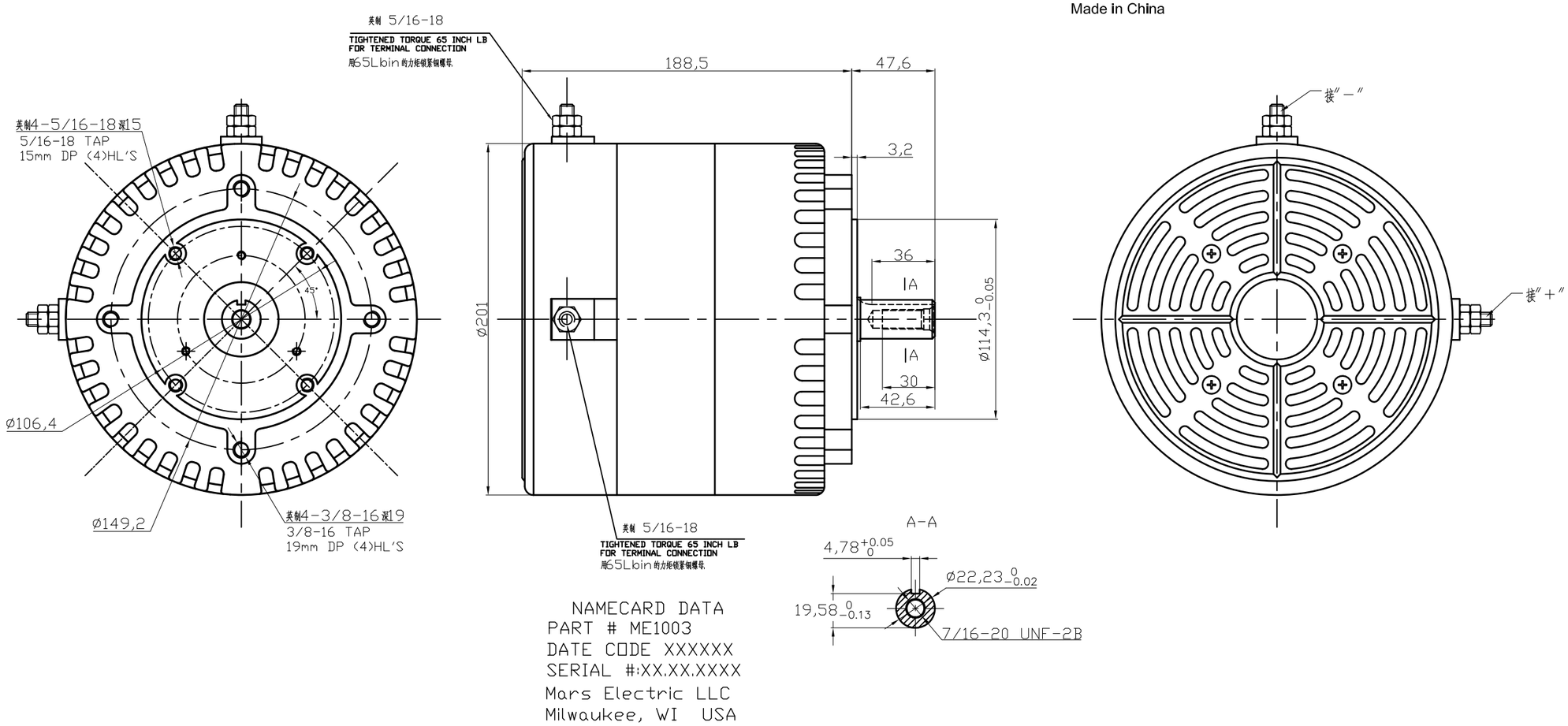

NAMECARD DATA
PART # ME1003
DATE CODE XXXXXX
SERIAL #:XX.XX.XXXX
Mars Electric LLC
Milwaukee, WI USA

规格表

型号 MODEL	输出功率 (W) POWER(W)	电 压 (V.DC) VOLTAGE(V.DC)	转 矩 (LB·IN) TORQUE (LB·IN)	额定转速 (RPM) LOADED SPEED(RPM)	空载转速 (RPM) NO LOAD SPEED(RPM)	电流 (A) CURRENT (A)
ME1003	11500	72	315	2800±250	appr. 3700	≯200

REV.	CHANGES	BY	ECO NO.	DATE
-	-	-	-	-
-	-	-	-	-
-	-	-	-	-
-	-	-	-	-
-	-	-	-	-
-	-	-	-	-
-	-	-	-	-

DO NOT SCALE DRAWING
THIS DRAWING IS PROPRIETARY PROPERTY OF MARS ELECTRIC LLC CORPORATION DISCLOSED IN CONFIDENCE, WHICH MAY NOT BE USED OR DISCLOSED WITHOUT PERMISSION. RETURN PROMPTLY AFTER USE.

DIMENSIONING AND TOLERANCING PER ANSI Y14.5M-1994

CLASSIFICATION OF CHARACTERISTICS
CRITICAL (C):
EMMISIONS (E):
MAJOR (M):

MATERIAL
S/N: CODE:
MODEL NO:
SIM TO:

TITLE
OUTLINE
DRAWN: lxp 10.04.23
APPR:
DEPT:
SCALE: -

Mars Electric LLC
MILWAUKEE, WISCONSIN, U.S.A.
-
DESIGN VENDOR: -
0JWT.301.354 | REV - | SHEET 1 OF 1