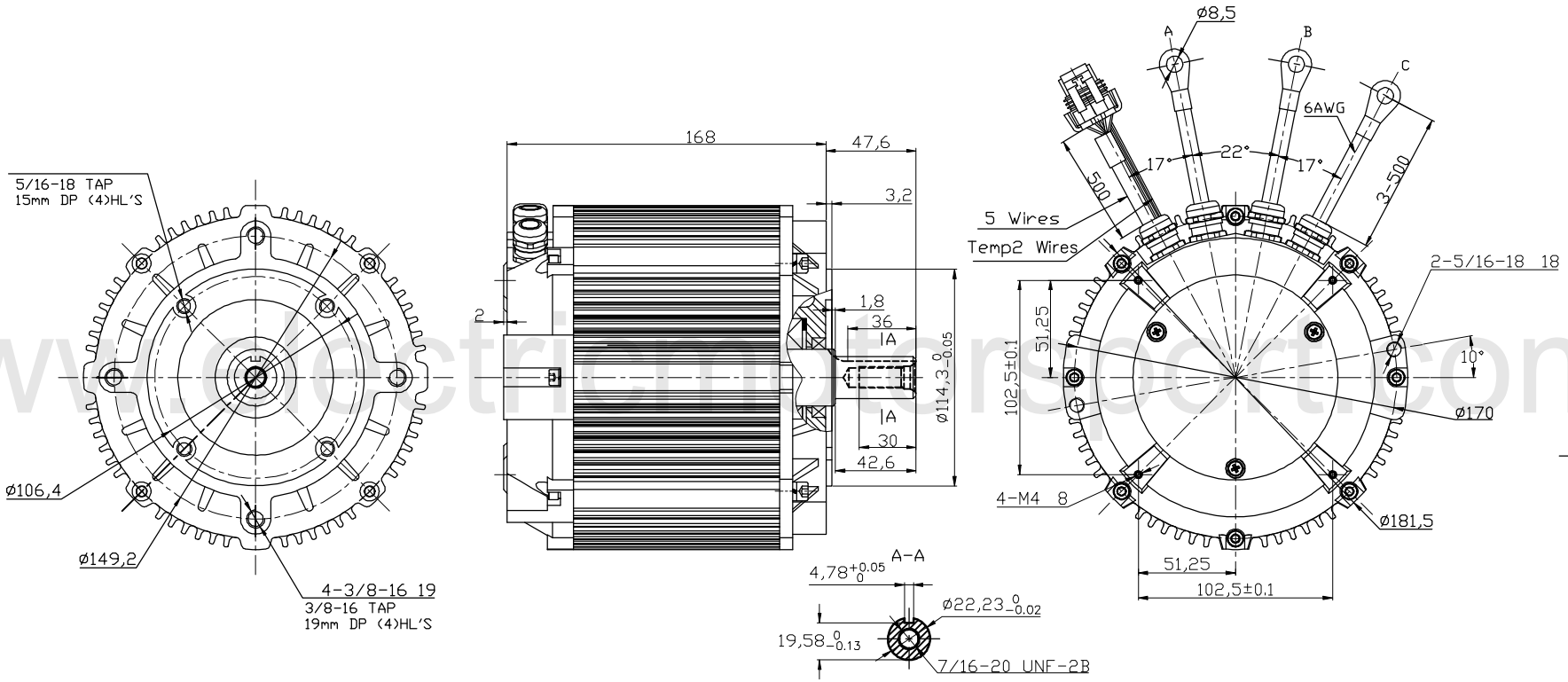

MODEL	POWER(W)	VOLTAGE(V.DC)	TORQUE (N.m)	LOADED SPEED(RPM)	DUTY	IP CODE
ME1719	6000	60	14.3	4000	S1	IP65

						OUTLINE
				M		0JWT.303.534
			17.12.06			

www.electric-motors.com